MDR-50

PRODUCTION LINE OF **SURGICAL MASKS**

FLEXIBLE LINE

IDM automation

MDR-50

PRODUCTION LINE OF **SURGICAL MASKS**

MDR-50 is the IDM Automation line for the production of surgical masks.
It is “100% made in Italy”, fully automatic and designed for an indicative productivity of 50 surgical masks / minute – to be defined according to the type of tissue.

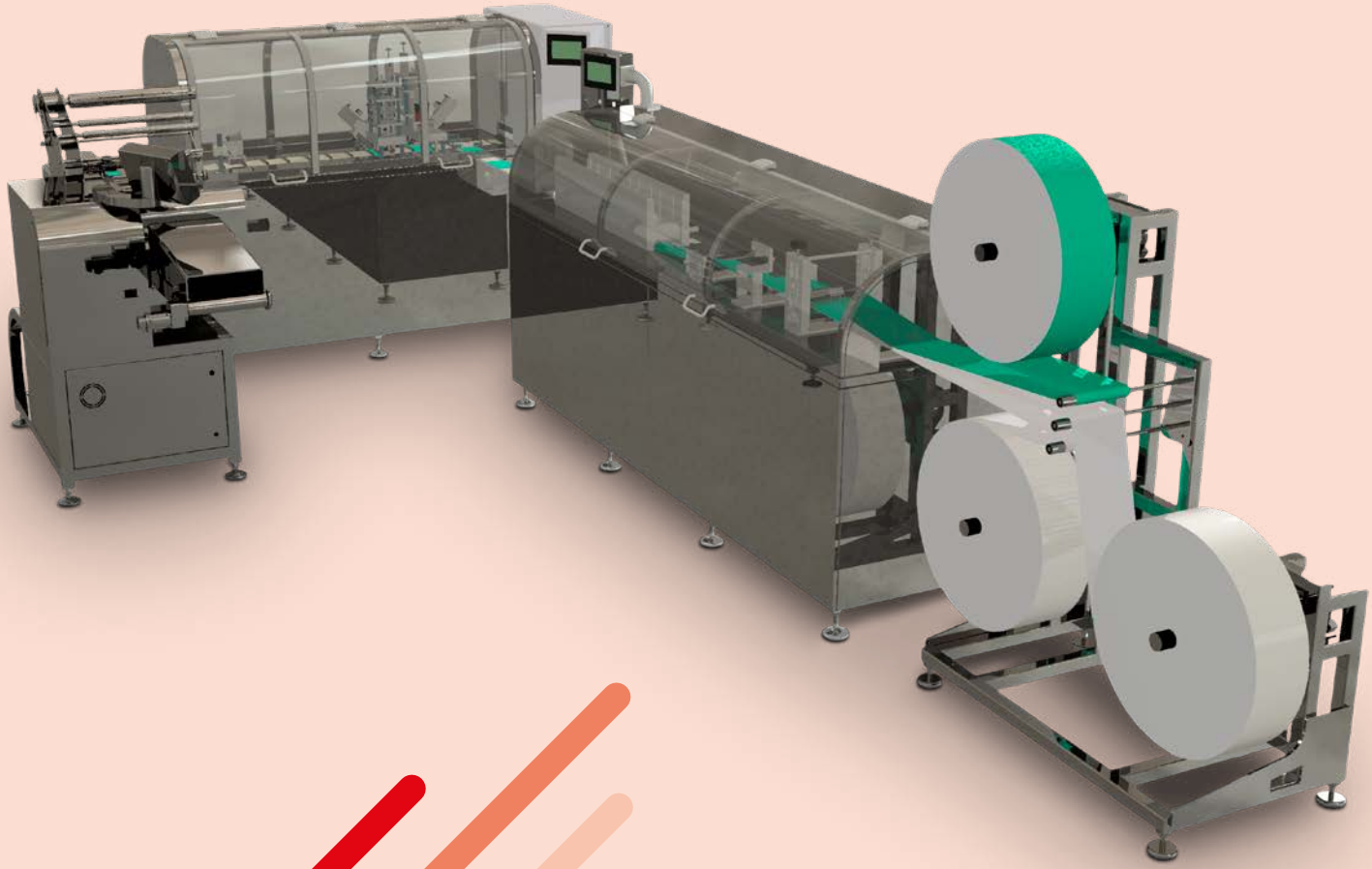

THE MDR-50 LINE IS COMPOSED OF THREE MACHINES:

1. **Machine for the production of the mask:**
   - Roller support unit for the non-woven textile spools
   - Non-woven textile coupling unit
   - Non-woven textile folding unit
   - Unit for cutting and laying the nose-tighting bar starting from the coil
   - Longitudinal non-woven textile welding unit with ultrasound system
   - Transversal non-woven textile welding unit with ultrasound system
   - Non-woven textile cutting unit
   - Masks transfer unit

2. **Machine for the masks finishing**
   - Elastic wire cutting unit and welding of the same elastic wire on the right side of the mask with ultrasound system
   - Elastic wire cutting unit and welding of the same elastic wire on the left side of the mask with ultrasound system
   - Internal folding of the elastics
   - Correct elastic positioning control with vision system (optional)
   - Unloading unit for valid masks

3. **Mask packaging machine (optional)**
   - Packaging of the single mask, or multiple masks by mean of a flowpack machine.

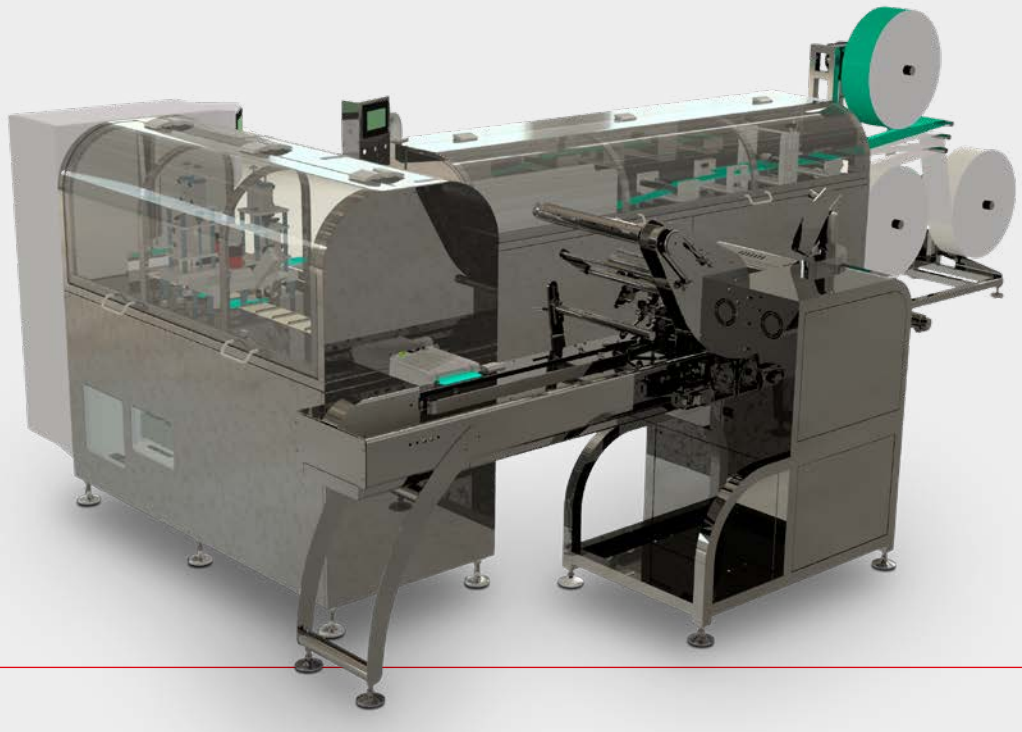

picocommunications.com

MDR-50

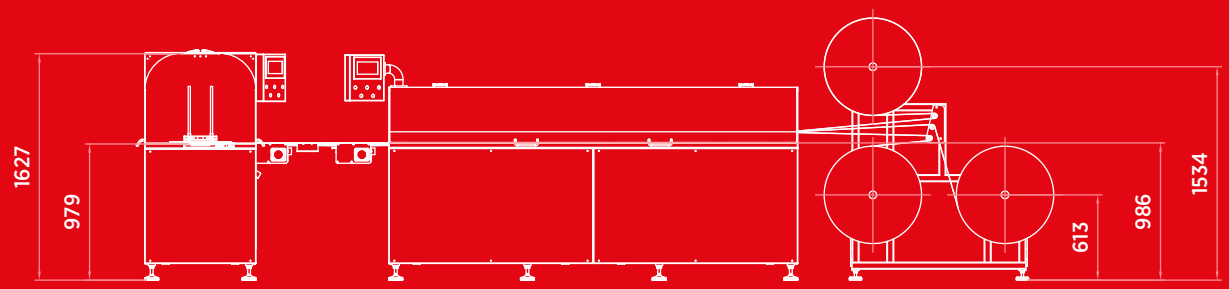

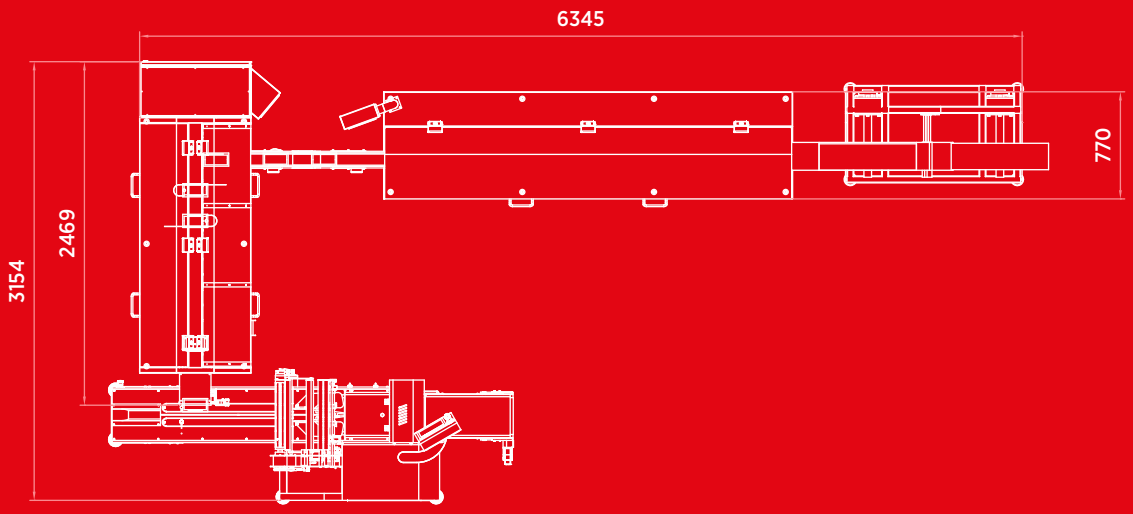

TECHNICAL DATA

MACHINE DIMENSIONS
6345 X 3154 MM, H 1627 MM

PRODUCTIVITY
UP TO 3000 PCS/H

IDM AUTOMATION S.R.L.
Via Frasconà 6/8 • 27029 Vigevano (PV) • Italia
T +39.0381.81887 • F +39.0381.81887
www.idmautomation.it

OUR PLUS **FOR YOUR PLUS**