A	ETIQUETTEUSE "BL400/VTE/XL"		
	DONNEES TECHNIQUES		
	POIDS NET	Kg	1000
	PUISSANCE INSTALLEÈ	Kw	4
	CONSOMM.AIR COMPRIME'(6bar)	Nl/1'	20
	MAX. HAUTEUR DE TERRE	H.	2395
1	-BRANCHEMENT ELECTRIQUE	H.	250
2	-BRANCHEMENT AIR COMPRIME'	H.	1150
3	-BRANCHEMENT EAU	H.	/

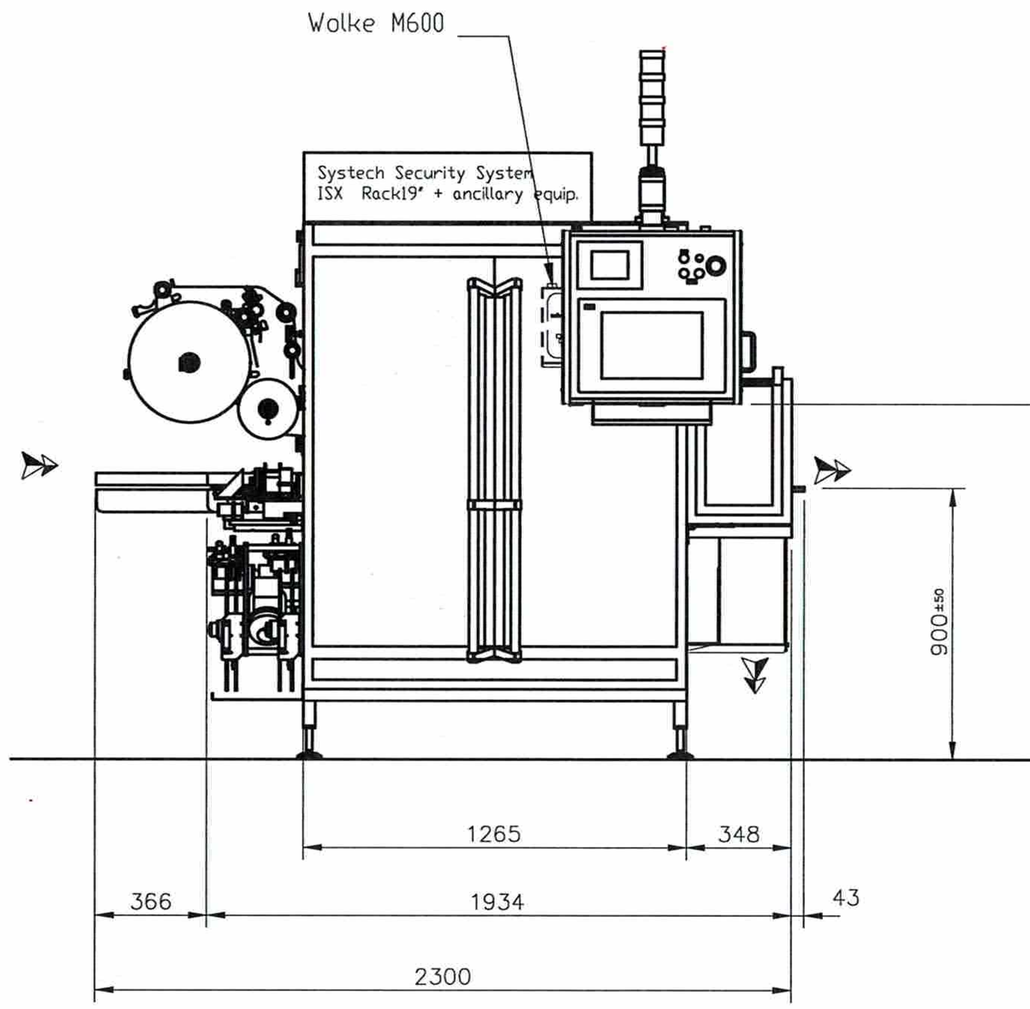

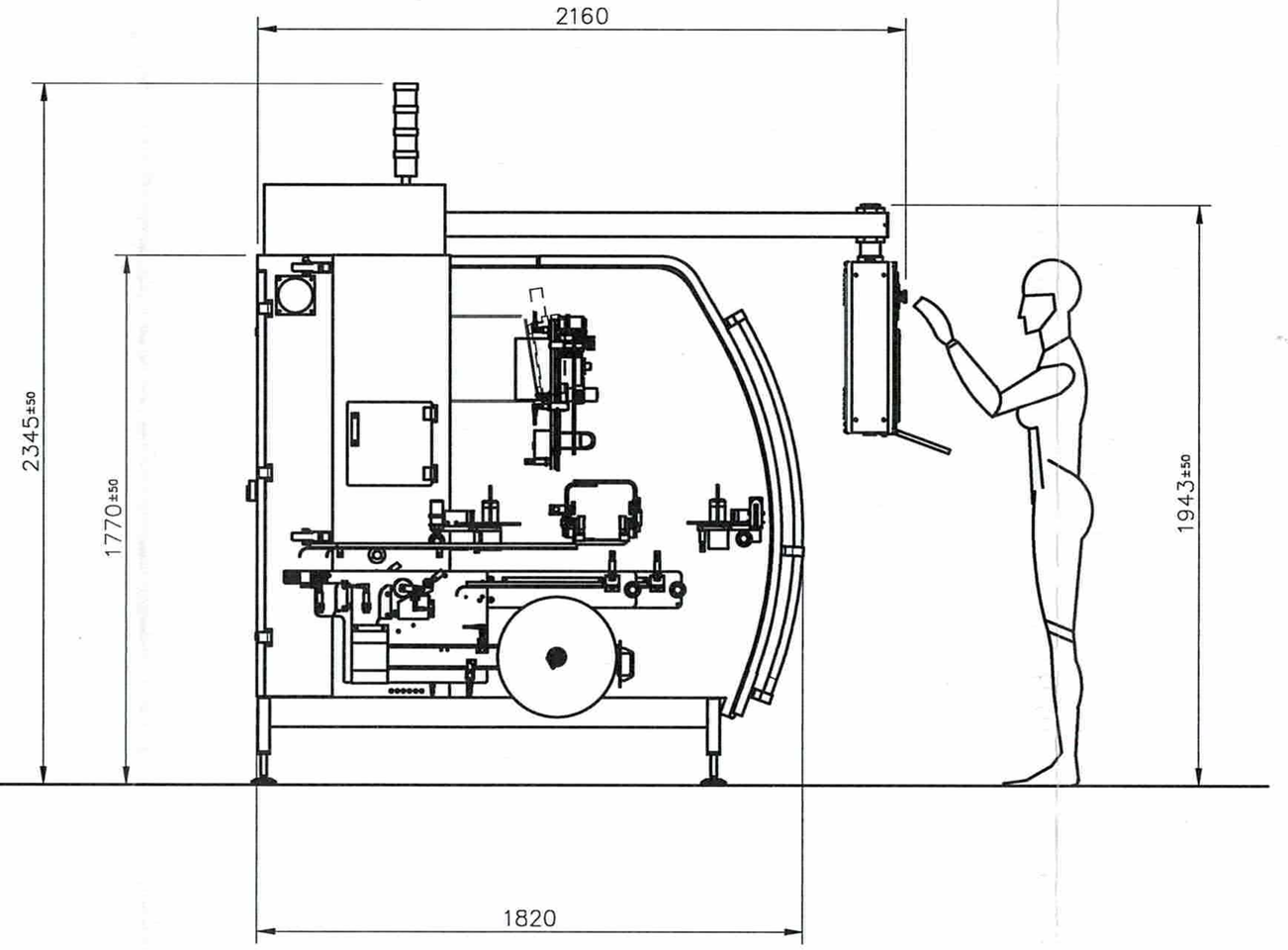

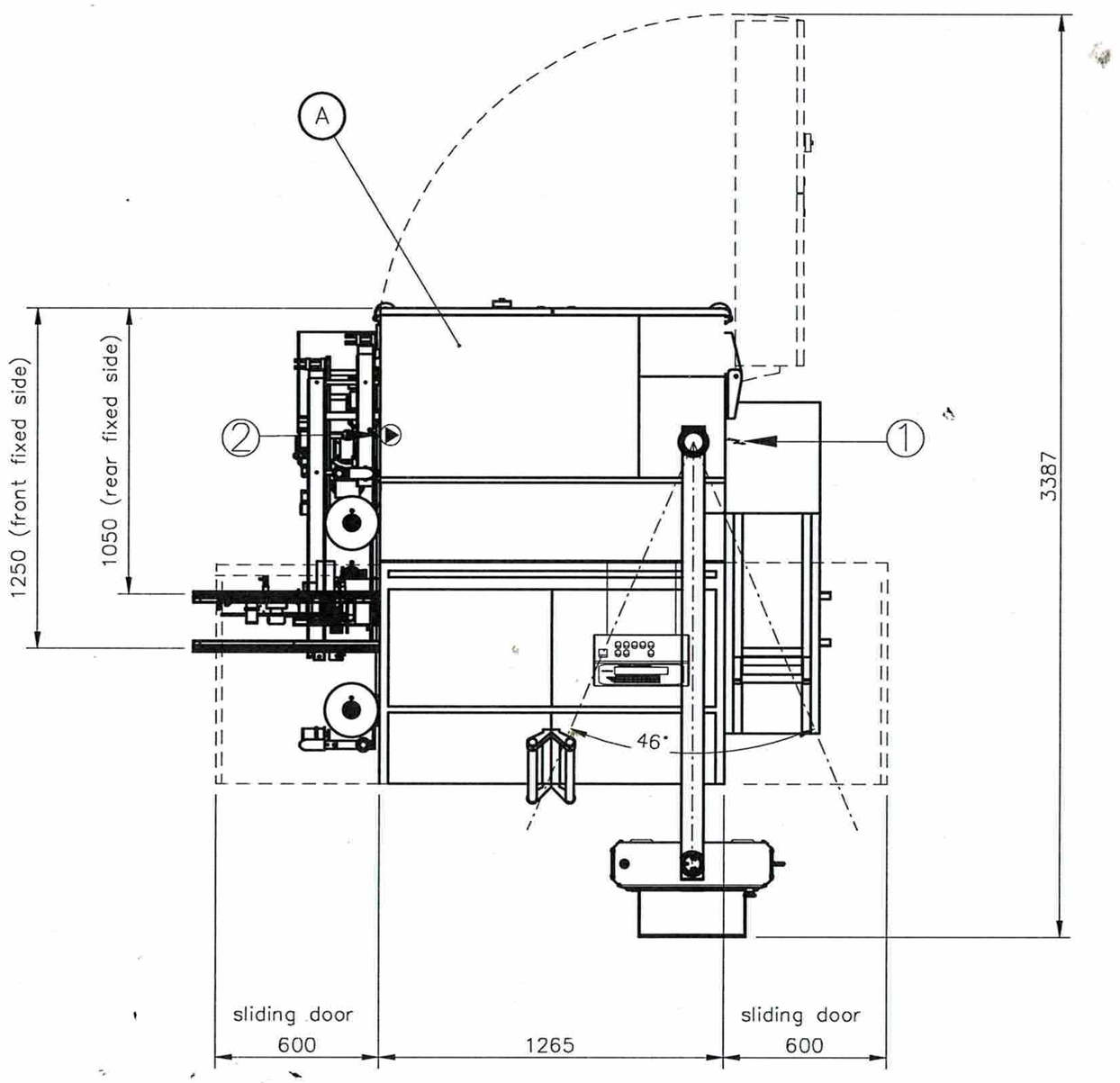

NERI Building efficiency — Barberino - Firenze (ITALY)	CUSTOMER PREN.ASTRA ZENECA (FRA)		DATE 23/11/2010
	COUNTRY FRA		ISSUED BY Cassara_A
	INTERNAL ORDER No. N3100095	INTERNAL PROJECT No. --------	OBTAINED BY 60N0038300
	DESCRIPTION BL400/VTE/XL		DRWG No. 60N0061100
ALL RIGHT RESERVED	ALL DIMENSION IN MILLIMETERS SUBJECT TO CHANGE		Layout A2 — SCALE 1:20