"ONE - STEP" VACUUM PROCESSOR
(MIXER - GRANULATOR - DRYER)

ROTO P2000

ZANCHETTA (ROMACO GROUP)

ROTO P is a "one-step" high shear high speed processor

- to MIX	dry powders
- to GRANULATE	by liquid binder
- to DRY	by heat and vacuum

the loading is made by continuous or intermittent **VACUUM.**
ROTO PROCESSOR is equipped also with **TILTING** bowl, giving a gentle blending to the product during drying phase, to increase the flexibility of the machine and to have a better quality of the granules particularly with difficult products
ROTOCONTROL allows the monitoring and automatic control of the process, the record of the parameters of the batch and main physical quantity In alternate, **ROTOPRINT** gives only a printout of the batch parameters and some physical quantities. It does not allow granulation and drying automatic end point control. However it can give a signal of end granulation.

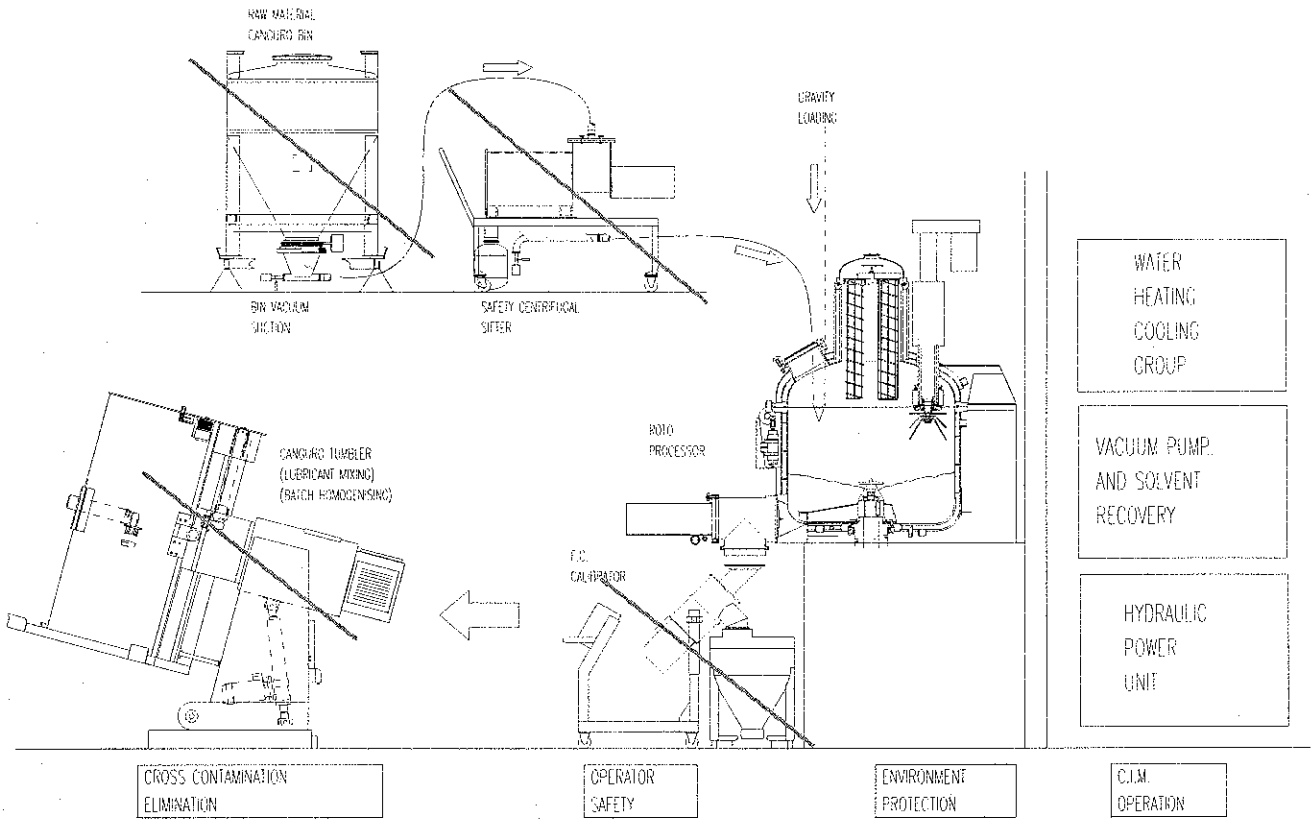

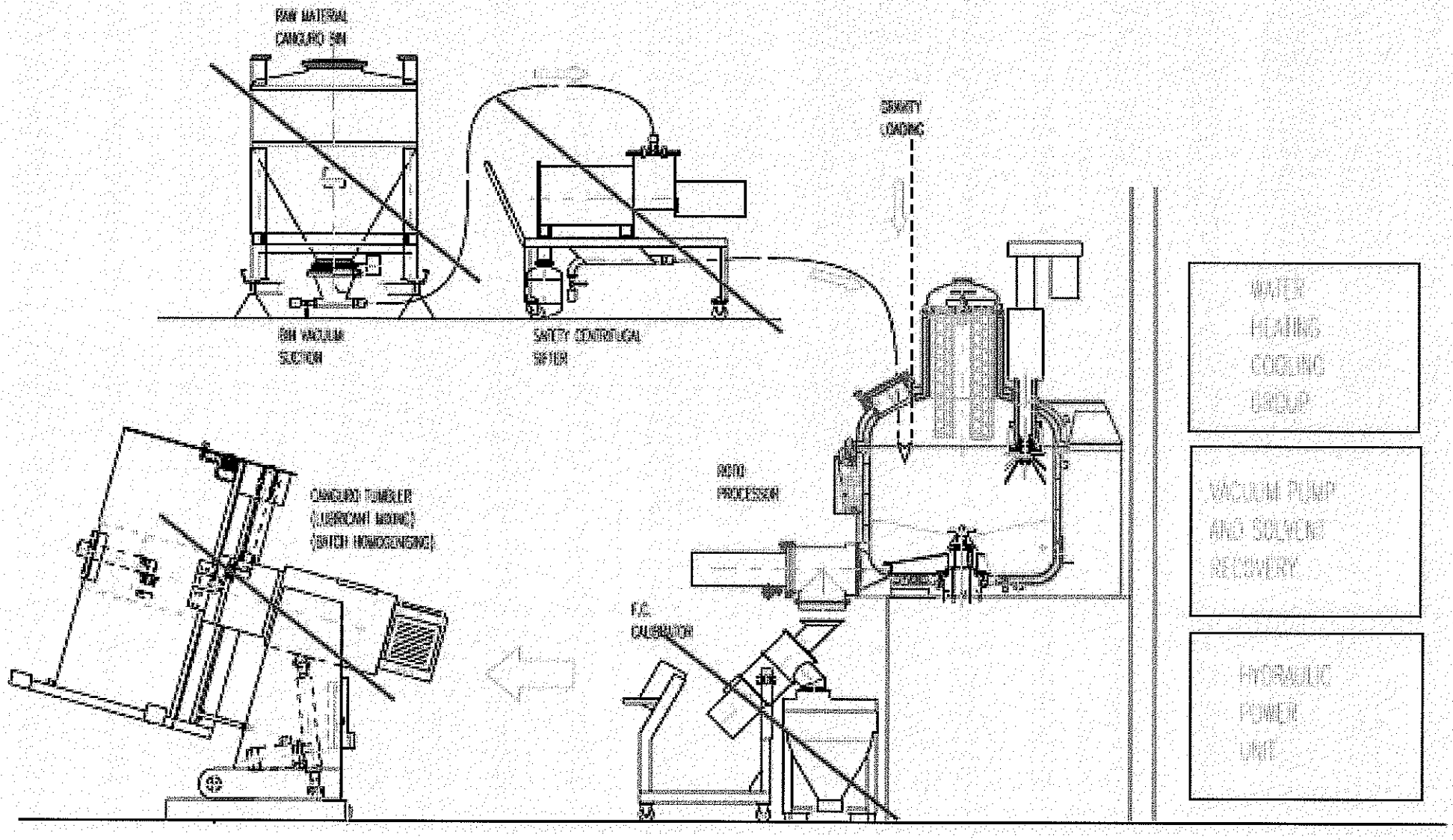
RAW MATERIAL
CANGURO BIN
BIN VACUUM
SUCTION
SAFETY CONTROL CAL
SIFTER
GRAVITY
LOADING
CANGURO TUMBLER
(LUBRICANT MIXING)
(BATCH HOMOGENISING)
ACID
PROCESSING
F.C.
CALCINATOR
WATER
HEATING
COOLING
GROUP
VACUUM PUMP
AND SOLVENT
RECOVERY
HYDRAULIC
POWER
UNIT

TECHNICAL SPECIFICATIONS

Roto P2000

Geometric capacity (up to the edge of the vessel) 2000 liters

Working capacity (depending on product characteristics) min/max.	between 25 and 70% of geometric capacity	
"Batch" maximum capacity (for a theoretic material with bulk density of 0,5)	kg 700	
Impeller speed (min/max.)	RPM	3,5 / 80
Chopper speed	RPM	0 / 1500
Main hydraulic pump motor	kW	110
Auxiliary hydraulic pump motor for opening of the lid and tilting	kW	7,5
Standard electric tension (max. admissible variation is ± 5%)	380 V - 50 Hz - 3 ph. o 440 V - 60 Hz - 3 ph.	
Filtering surface (cartridges) material: st. st. support - filters in Gore-Tex (antistatic - Teflon coated) filtering fineness: 1÷5 mμ	m^2	

Working pressure of water into the jacket: 2 bar

Approx. weight of the machine: - empty	kg	5200

Materials

- parts in contact with the product	AISI 316 and AISI 316 L
- external parts	AISI 304
- jacket, view components and all exterior cladding	AISI 304

Non in view carbon steel mechanical parts are, anyway, covered with epoxidic paint.

Finishing

- surface in contact with the product	polished	grain 300
- surface not in contact with the product	satin	grain 200

Upon request we can provide internal electro-polishing and/or exterior polishing

GENERAL DESCRIPTION OF ROTO P PROCESSING MACHINE

Process granulator Roto P

The **BOWL** has a flat bottom, without dead points, with discharge valve completely flushing the bottom of the bowl to allow a complete discharge of the product. The vessel is jacketed for heating-cooling, thermal insulated and covered with st. st. to allow washing by means of pressurised water.

The **LID** is completely jacketed and insulated (except coupling flange) to avoid vapours condensation. Silicon gasket between lid and vessel is easily cleanable and assures vacuum tight.

The **FILTER** on the lid allows a total recovery of powders thanks to air/nitrogen counter-flushing. The filters cap is jacketed to avoid condensations of vapours but not insulated. One set of cartridges on filter support is included in standard supply.

The **DISCHARGE VALVE** is pneumatically acted, totally inspectable and cleanable, profiled to match the bottom of the bowl to avoid stagnation of the product. A safety grate and switch are provided also.

The **3-BLADE IMPELLER** scrapes the bottom, with a special shape to achieve optimal mixing and granulation. The impeller has high specific power (about 0,15÷0,20 kW/kg) and high TIP speed (9÷10 m/sec). These particular features explain the high performances of the machines even with difficult products. The impeller can be easily removed for inspection and cleaning when required.

The fixed **CHOPPER** is located on the lid with extension of the shaft to fit to different batches (telescopic chopper). The large diameter of the blades with high TIP speed keeps shaft rotation speed within safety limits. When the lid is open, the blades are completely inspectable and can be replaced with others with different shape for special granulation requirements or for spheronization.

Hydraulic group

It is assembled on a skid and cladded with carbon steel. Main pump, auxiliary pump with relative electric motor, oil tank and filters, heat exchanger for the cooling, solenoid valves and servo controls for the functioning of the hydraulic actuators on the machine are installed on this skid.
Standard supply does not include hydraulic oil.

Control Panel

The Control Panel is manufactured in st. st. with sizes 350 x 750 x 750 mm to be installed on the wall. The type of protection is IP 55 with membrane type push-button panel for easier cleaning, with the exception of those commands that law request to be by push-buttons (emergency mushroom type push-buttons and 3 key selectors) and furthermore 3 (°) spy lamps (line, emergency and malfunctioning). The panel includes also:

- n° 1 Video Terminal Interface (VTI) with alpha numerical display and membrane type keyboard for process operations (manual commands and semiautomatic programs activation). On display it is indicated:
- water temperature into the jacket

- product temperature
- vacuum level
- impeller speed
- chopper speed
- oil pressure of hydraulic motor
- eventual other quantities according to selected optional

The control panel can be assembled flushing the wall with rear accessibility.
Electric tension on board 220/24 V.

(°) N° 4 spy lamps if Rotoprint is included.

The above described Control Panel is not designed in case Rotocontrol option is chosen being replaced by a Personal Computer.
Auxiliary Control Panel is included to locally open/close the lid (for safety reasons) installed close to the platform.

Power Panel

The Power Panel is made of a vertical painted carbon steel panel with the following sizes:
2000 x 500 x h. 2100 mm
It includes: power contactors, thermal relays, transformers, magnetic thermal relays, operational relays, PLC, terminal boards, other electric auxiliaries.

Standard accessories of basic machine

- **Safety pin** when the lid is open (double effect - pneumatic).
- **Spraying pipe of binding solution**, with 3 different sizes of nozzles with adjustable depth and easy extraction
- Openable **Sightglass** with manual wiper , quick clamped to serve as local hand-hole (DN 200).
- **Product temperature probe** of the vertical type positioned on the lid. The water temperature probe is located on the heating group.
- **Vacuum breaking valve** with filter
- **Gas flow rate indicator** for the regulation and control of seal flushing gas
- **Safety pressure relief valve** (breakage disk upon request).
- **Set of operating and maintenance manuals** (2 copies).

TILTING

Roto P is equipped with **TILTING** device powered by hydraulic group. During the drying step the bowl tilts (± 90°) from the vertical position as shown below. In this case, the vessel has two supports The machine has a different basement to house the tilting device.

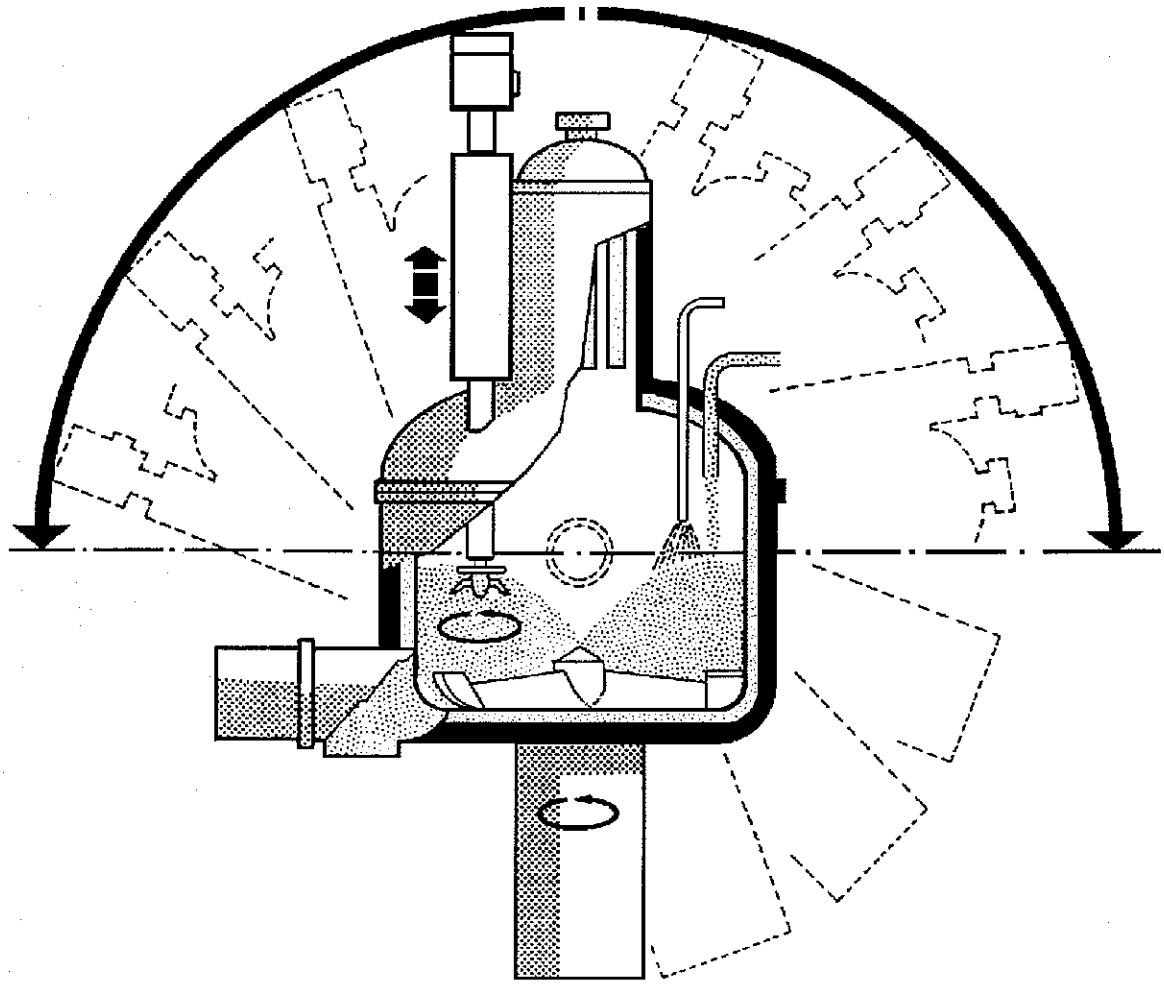

The big advantage of tilting option is that the it gives a gentle movement to the product during the drying phase. This soft blending allows to stop the main impeller during drying phase (or at least to have an intermittent functioning at low speed), as the agitation of the product is done by the tilting. This allows to preserve granule size and quality and reduce the percentage of fines which is a negative consequent of continuos impeller agitation.

Furthermore the tilting of 180° increases the surface of thermal exchange between the hot walls of the Roto jacket (in which water flows) and the product, with the result of reducing drying times.

The tilting has also a positive self - cleaning effect with a sensible reduction of sticking on the walls with majority of products.

Tilting option consists of:

- mechanical structure for the bearing of the vessel connected to the basement
- hydraulic actuator with double oil chambers
- regulating valves to adjust tilting speed
- safety disc brake with pneumatic nippers (air off→ brake on; air on→ brake off)
- position transducers
- possibility to vary tilting angle

With tilting option the flexibility of the machine increases due to:

- possibility to granulate with tilted vessel
- drying phase without the agitation by main impeller not to stress the product especially when the granules are weak.
- possibility to discharge with slope vessel for cleaning operation.
- easier removal of main filters with vessel at 90°

ELECTRICAL ACCESSORIES OF THE MACHINE

Auxiliary control panel for discharge located close to discharge valve to easy discharging operations to the operator:

- emergency push-button mushroom type
- open/close discharge valve push-button
- potentiometer to adjust impeller speed

Electronic control of pressure drop through filters and consequent automatic cleaning by counter-flushing

Vapours temperature probe usable also to determine end point of drying, located on vacuum line.

Tilting angle of the machine **variable by keyboard** from ± 23° to ± 90°

MECHANICAL ACCESSORIES OF THE MACHINE

telescopic chopper to adjust the depth into the product according to the batch or for a complete extraction during all the phases in which it could be harmful. The shaft of the chopper is protected by a Teflon bellow to avoid any possible deposit of product on its surface.

CIP spray-ball connected to the service flange of the machine lid, fed by water at 6 bar pressure 100 l/min flow rate. The spray-ball is moved by water.

St. st. platform around the machine including approach ladder manufactured in st. box section and antislip st. st. walking platform.

AUXILIARY GROUPS

Skid mounted vacuum group with the necessary piping, valves and pipe fittings and including:

Liquid ring vacuum pump with separator tank and a system for automatic drainage in case of over-temperature and reinstatement with fresh water. The pump has the following characteristics:

- capacity	Nm^3/h	500
- installed power	kW	15

Plate exchanger for cooling of liquid ring water in closed circuit by means of chilled water to save water consumption

Roots pump to increase vacuum level inside the bowl automatically activated at convenient vacuum level

- capacity	Nm^3/h	
- installed power	kW	9

Shell and pipe condenser (before vacuum group assembled on same skid of vacuum group with the following characteristics:

- shell and pipe type manufactured in AISI 304
- sightglass

Skid mounted hot water generator

steam type (mod. SH) including:

- steam/water shell and pipe heat exchanger
- circulation pump
- thermoregulating valve on steam line
- discharge group for the condensate
- expansion vessel of the closed type
- piping, manual valves and control instruments

Plate exchanger for the cooling in closed circuit (mod. SH/C)
Estimated consumption of cooling water (7 - 12 °C) l/h

Rotoprint 5 to record process parameters with possibility to determine end point of granulation by the control of power absorbed by impeller hydraulic motor. This control is made by measuring hydraulic oil pressure and impeller RPM. The reaching of end point granulation is communicated by a luminous or acoustic signal.

The system includes:

- Personal Computer with minimum configuration: 80486, 4 Mb RAM, 80 Mb HD.
  Operative software with MS DOS 5.0 or upgrading, WINDOWS 3.1, Microsoft "VISUAL C" and ROTOPRINT 5 working under WINDOWS 3.1
- 14" video
- Keyboard and mouse (or trackball)
- "Ink jet" printer

It is possible to record max. 10 parameters of the process and subsequent printing of batch report. The parameters are:

- main impeller revolving speed

- chopper revolving speed
- hydraulic oil pressure
- product temperature
- vacuum level
- temperature of water into the jacket
- visualisation of GA. ST. flow air (in case of item B-7)
- vapour temperature on vacuum line (in case of item B-4)
- [...]

Rotocontrol version 5 is a monitoring and supervisory system that allows manual, semi-automatic and automatic control of Roto P machines

The system includes:

- Additional cards on Program Logic Controller PLC type SIEMENS (Simatic) mod. S5 115 U with the following functions:
  . Automatic sequencing
  . regulation of monitored process variables
  . management of the process as a sequence of elementary pre-defined operations
  . strict interaction with Personal Computer (PC)
  -Personal Computer with minimum configuration: 80486 dx 4 100 MHz, 80 Mb HD, 32 Mb RAM connected in series to PLC to carry out:
  . password to access system functions
  . editing of the procedure
  . connection between procedure and production order (from keyboard)
  . machine and process management
  . synoptic visualisation of the "status" of the machine
  . on-line visualisation of typical process quantities
  . on-line visualisation of alarm and events with written indication and management of the alarm
  . on-line trend visualisation
  . manual commands of the machine
  . read in, visualisation and printing of alarms, events and historical trends with searching both by date and by production order.
- "Ink jet" printer

Industrial rack manufactured in st. st., with 600 x 600 x 1600 mm sizes for the housing of the PC and printer, with protection screen and membrane keyboard.