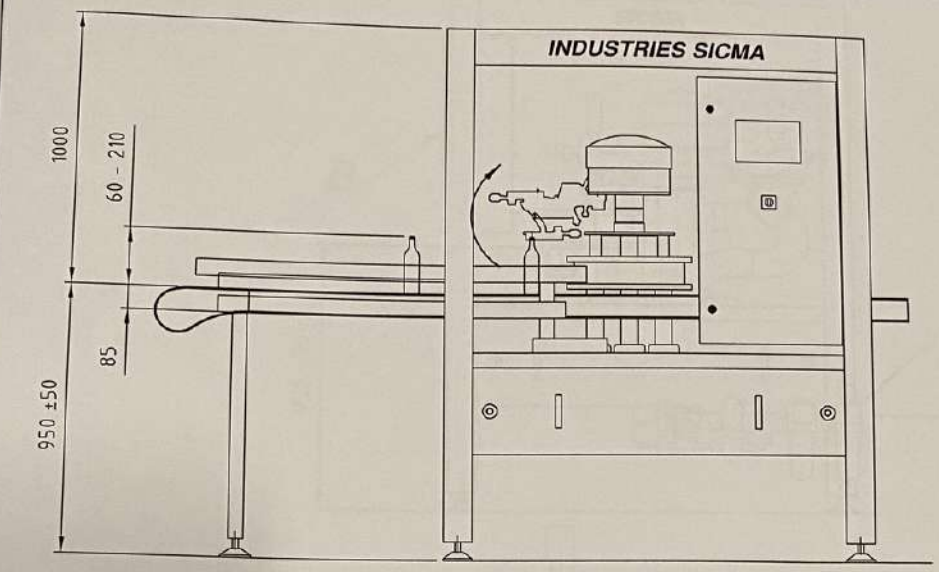

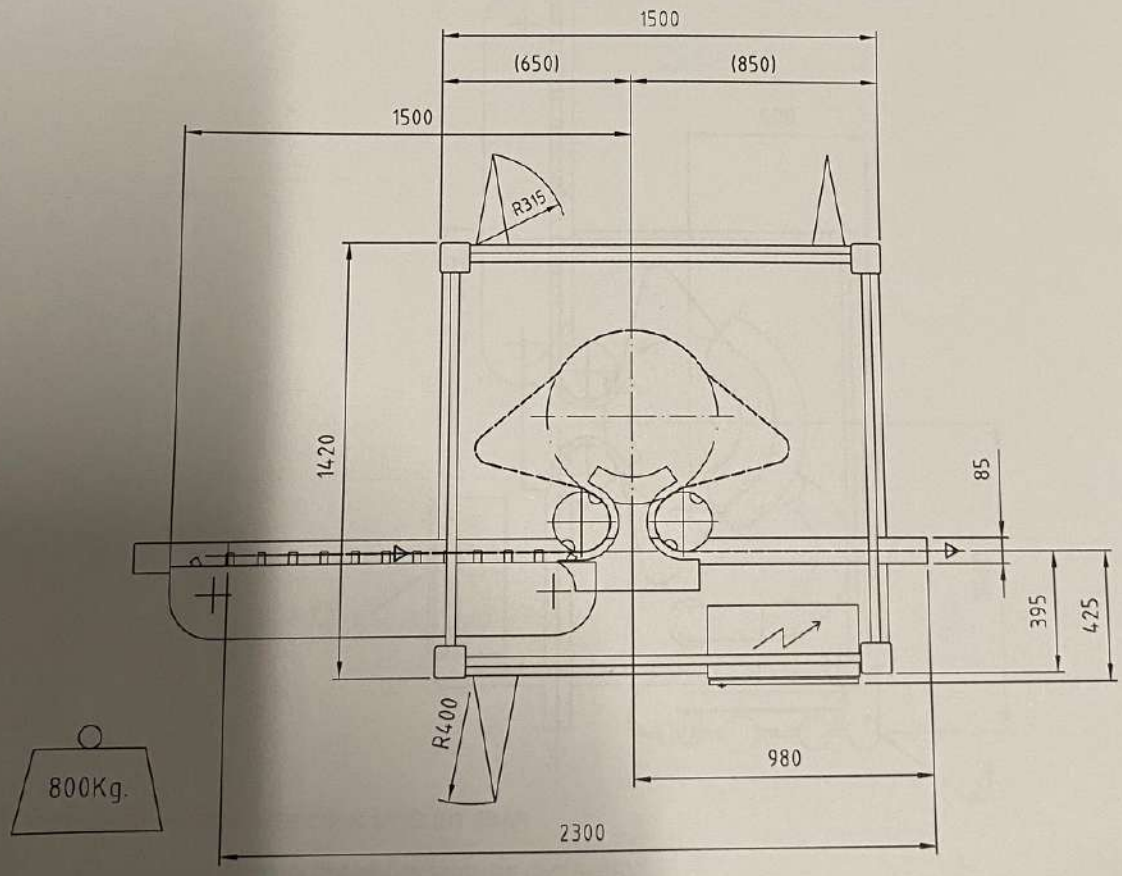

INDUSTRIES SICMA, S.L.
C/ Les Alzines, S/N (Pol. Industrial V2)
E-17111 VULPELLAC (Girona - Spain)
Tel. (+34) 972 643 646
Fax (+34) 972 641 950
E-mail: info@industriessicma.es

SHISEIDO International France, S.A.S.	N°200320	03.2004	GRUPO
SOUFFLEUSE	B01-6/301		HOJA
PLAN D'IMPLANTATION	1790	03.20.E	00.4.000